SM200-300-C02-E6D

FLIGHT SIMULATOR

SANLAB

FLIGHT SIMULATOR

SM200-300-C02-E6D

ELEVATING FLIGHT SIMULATION TO NEW HEIGHTS

Experience unparalleled realism with SANLAB's 6DOF motion platform. Every pitch, roll, and heave is faithfully recreated, allowing you to feel the subtle nuances of flight dynamics from takeoff vibrations to high-G maneuvers just as if you were in a real aircraft.

AUTHENTIC COCKPIT ENVIRONMENT

Train in an environment that mirrors real-world aircraft cockpits. With authentic controls, instruments, and cockpit layout, SANLAB Flight Simulator ensures that every action feels genuine, making the transition from simulation to actual flight seamless.

EXPERIENCE IMMERSIVE FLIGHT WITH VIRTUAL REALITY

Step inside the cockpit with VR integration and immerse yourself completely in the virtual sky. From turbulent flights to precision maneuvers, the VR headset places you at the center of the action, letting you see and feel every detail in stunning realism.

SYSTEM ARCHITECTURE

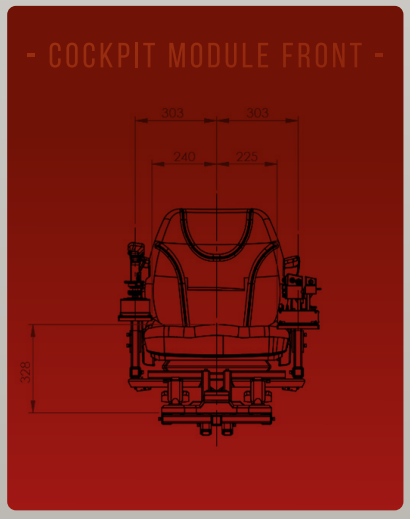

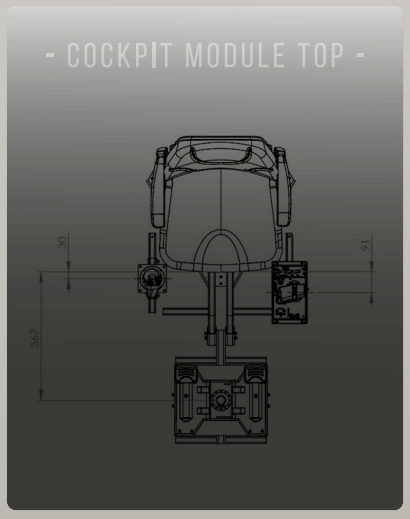

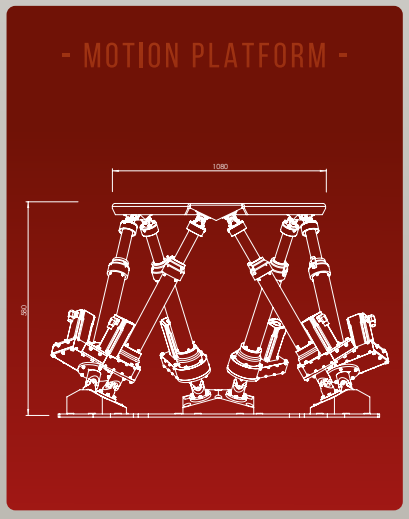

FLIGHT SIMULATOR

SM200-300-C02-E6D

6 Degrees of Freedom
Provides accurate feeling with 6DOF Motion Platform

Multi-Payload Compatibility
Supports multiple payload aircraft systems

Rugged Construction
Durable against impacts, environments

Modular Design
Allows customization for different payload needs

PERFORMANCE SPECIFICATIONS

	Velocity	Acceleration	Excursion *Single Axis*	Excursion *Multi Axis*
Surge	± 0.50 m/s	± 5 m/s²	-0.15 m - 0.18 m	-0.21 m - 0.21 m
Sway	± 0.50 m/s	± 5 m/s²	-0.15 m - 0.15 m	-0.22 m - 0.23 m
Heave	± 0.47 m/s	± 6 m/s²	-0.13 m - 0.12 m	-0.13 m - 0.12 m
Roll	± 53 °/s	± 400 °/s²	-23.10 ° - 23.08 °	-29.30 ° - 29.30 °
Pitch	± 53 °/s	± 400 °/s²	-22.60 ° - 23.96 °	-32.94 ° - 31.11 °
Yaw	± 60 °/s	± 500 °/s²	-28.90 ° - 28.88 °	-33.19 ° - 33.19 °

CONTACT US

Committed to customer satisfaction, we deliver tailored support solutions designed to meet your specific operational requirements.

+90 216 377 70 01
+90 542 377 70 25

SANLAB

www.sanlab.net
info@sanlab.net